Though it is not within the scope of this paper to discuss the several advantages of machines over paper, it must be said that the decision to use or not to use a particular kind of device has nothing to do with the decision to prepare or not prepare an instructional program. The source of the principal effectiveness of auto-instructional techniques resides in the program. Though the machine can be used to make material more accessible to the student to provide more potent reinforcements and more immediate knowledge of results, to increase motivation, to score and analyze student responses, etc., it is useless without a program.

Summary

This paper has outlined one sequence of operations that can be performed in the preparation of an instructional program. The attempt has been to describe the steps involved in this method for programming rather than discuss the mechanics of frame and page preparation (*i.e.*, cueing, prompting, branching, etc.).

To leave you on an encouraging note, I would remind you of two items. The first is that, though programming involves some effort, the results are rewarding. Students invariably ask for more material in programmed form, and they appreciate the efforts made specifically in their interest. The other is that it is not at all necessary to program an entire course (at one time) or to change the structure of a course completely in order to enjoy the benefits of an instructional program. An excellent place to begin is with a single concept which appears to be offering some difficulty to your students. Not only will you be pleased with the results of your programming effort, but you will be amazed when you discover *why* the concept you selected to program was so difficult for students to understand in the first place.

The challenge of building an instructional program that works is one which every instructor who considers himself a professional should not be able to ignore, and is one which I am sure he will not regret accepting. So come on in, the water's fine.

References

[1] B. S. Bloom, Ed., "Taxonomy of Educational Objectives," Longmans, Green and Co., New York, N.Y., Handbook I: Cognitive Domain; 1956.
[2] R. F. Mager, "Preparing Objectives for Programmed Instruction," Fearon Publisher, Inc., San Francisco, Calif.; 1961.
[3] H. A. Shoemaker, "The functional context method of instruction," IRE Trans. on Education, vol. E-3, pp. 52–57; June, 1960.

PLATO: An Automatic Teaching Device*

D. BITZER†, P. BRAUNFELD†, and W. LICHTENBERGER†

Summary—**PLATO—a teaching machine developed during the past nine months at the Coordinated Science Laboratory of the University of Illinois—is a device for teaching a number of students individually by means of a single, central, high-speed general-purpose digital computer. Each student is provided with his own keyset and television display. The keyset enables the student to control the sequence of materials presented to him by the machine, as well as to transmit to the computer answers to its questions. The computer communicates to each student by closed circuit television. It selects slides and writes or erases sentences and diagrams on a storage tube. These two outputs are superimposed and displayed on the student's television screen.**

Not only are textual materials presented to each student at a rate determined by that student, but the computer frequently poses questions. The student's answers—which may take the form of numerals, algebraic expressions, or words and phrases—are judged by the computer without revealing the correct answer to the question. Supplementary material is presented by the machine upon request for any question which the student finds difficult. The computer keeps detailed records of each student's progress through the material.

Though a two-student version of PLATO is now in operation, the paper describes in detail an earlier one-student system.

The system has been used to present a variety of subject matters, ranging from mathematics to topics in French grammar.

PLATO (Programmed Logic for Automatic Teaching Operations) is the name given to a teaching machine developed during the past nine months at the Coordinated Science Laboratory of the University of Illinois. It is a device for teaching a number of students individually by means of a single central general-purpose digital computer. Although a two-student version of the machine has recently been completed, this paper describes an earlier, one-student machine.

* Received by the PGE, August 9, 1961. Presented at the IRE WESCON Convention, San Francisco, Calif., August 22–25, 1961. The research reported in this document was made possible by support extended to the Coordinated Science Laboratory, University of Illinois, Urbana, jointly by the Department of the Army (Signal Corps and Ordnance Corps), Department of the Navy (Office of Naval Research), and the Department of the Air Force (Office of Scientific Research, Air Research and Development Command) under Signal Corps Contract DA-36-039-SC-85122, D/A Sub-Task 3-99-01-002.

† Coordinated Science Laboratory, University of Illinois, Urbana, Ill.

Authorized licensed use limited to: University of Michigan Library. Downloaded on November 24,2020 at 23:00:54 UTC from IEEE Xplore. Restrictions apply.

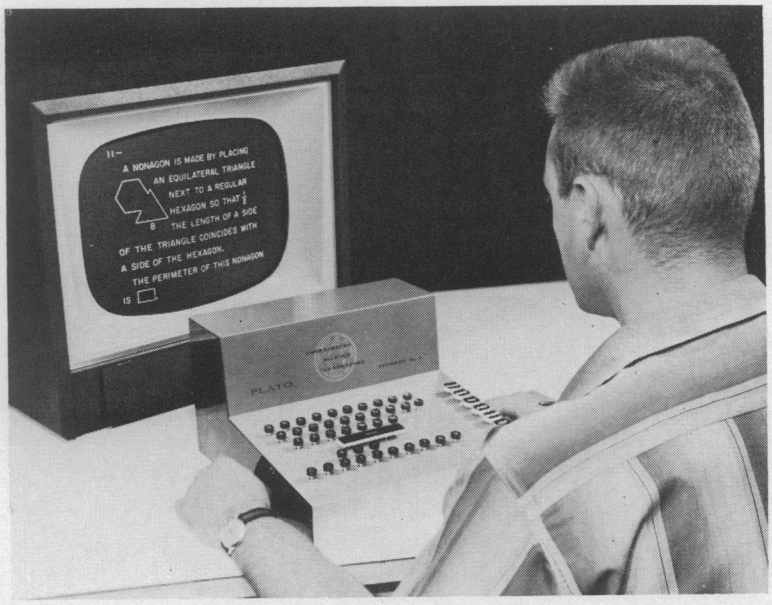

Student operating PLATO.

Organization of Equipment

The general organization of equipment in the one-student version of PLATO is indicated in Fig. 1. The central element of the teaching machine is ILLIAC, the University of Illinois medium-speed general-purpose digital computer. Since the sophistication of the teaching logic employed is necessarily limited by the central computer's capacity and speed, the following parameters are given: ILLIAC's storage consists of a fast-access Williams-tube memory of 1024 forty-bit words plus a drum with *circa* 10,000 available words. Its speed is characterized by an add time of 75 μsec.

The student communicates to the machine by means of a keyset, which allows him: 1) to submit answers to the machine's questions, and 2) to control the machine's presentation of materials. Several keysets have been constructed. These range from the original 16-key model to the more-elaborate recent version, which may be equipped with up to 64 keys. On the latest keyset, there is available a full complement of alpha-numeric characters and such additional symbols as may be required for special subject matters. Thus, student answers may take the form of numerals, algebraic expressions, or words and phrases. The student controls the machine's presentation of material by means of a number of special keys whose function is described in the next section.

The machine communicates to the student by means of closed-circuit television. There are two modes of communication:

1) Electronic Book: The instructional material is contained on a set of slides. ILLIAC may command an electronic switch (slide selector) to connect the video output of any given slide to the student's display. The slide selector has a capacity of 64 slides (to be expanded to 128) and can switch from any slide in the set to any other in 1 msec.

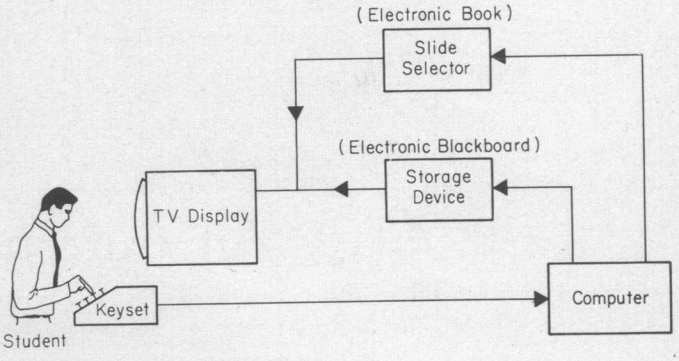

Fig. 1—General organization of PLATO equipment.

2) Electronic Blackboard: The machine may also cause characters, figures, graphs, etc., to be written on an intermediate buffer storage tube. The machine can write on the storage tube at a rate of 45 characters per second; ¼ second is required to erase its entire contents. The video output of the storage tube is mixed with the video output of the slide selector and displayed on the student's screen. In general, this mode of communication is used for all material which is generated in the course of the lesson itself, and cannot therefore be prestored on slides. For example, when a question is asked on a slide, this output channel makes it possible for the machine to display the student's answer in the appropriate place on the slide. The machine can also use this mode of output for displaying dynamic material such as moving points, etc.

Authorized licensed use limited to: University of Michigan Library. Downloaded on November 24,2020 at 23:00:54 UTC from IEEE Xplore. Restrictions apply.

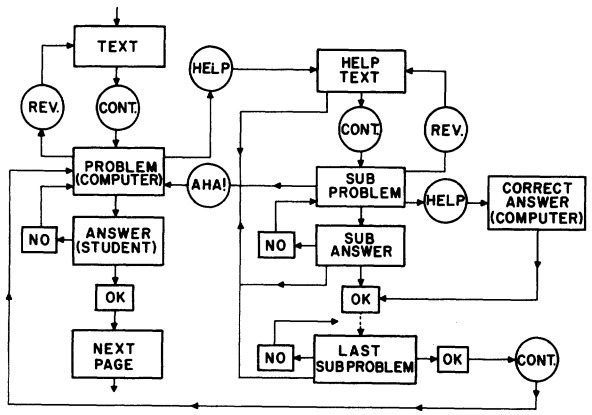

Fig. 2—PLATO programmed logic.

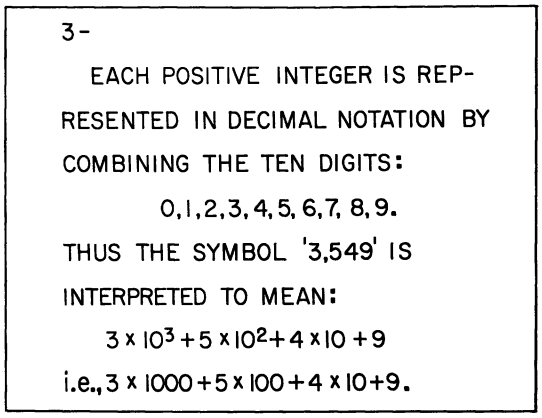

Fig. 3—Example of PLATO "text" slide.

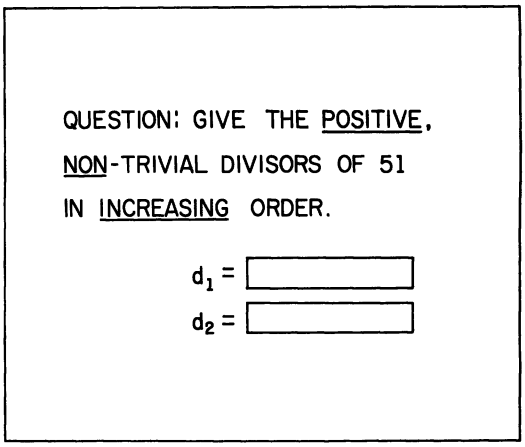

Fig. 4—Example of slide with questions.

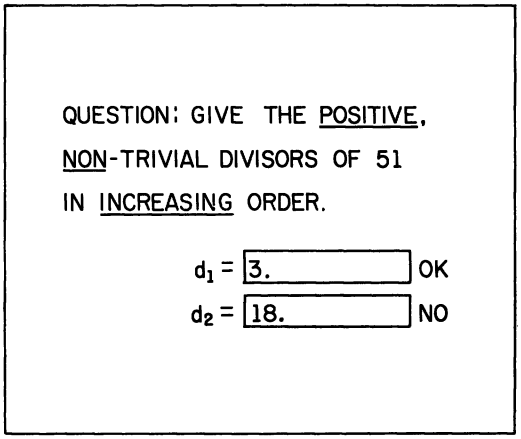

Fig. 5—Example of slide with student answers entered and judged.

Programmed Logic

Whereas the instructional material itself is contained on a set of slides, the logic by which instruction takes place is determined by programs within ILLIAC. The current logic requires the student to go through a fixed "main" sequence of slides, answering correctly each question posed in the course of this sequence. He may avail himself of supplementary materials for questions he finds troublesome ("help" sequences). Further details of this logic are exhibited in Fig. 2 and discussed below.

When a student has finished reading a slide of the main sequence containing only textual material (see Fig. 3), he pushes a button on his keyset labeled "continue." The "continue" signal is transmitted to ILLIAC which requests the slide selector to display the next slide in the sequence. On the other hand, if a student desires to review material contained on a previous slide, he may do so by pushing the "reverse" key.

In addition to "text" slides, the main sequence will, in general, include slides on which one or more questions are posed to the student (see Fig. 4). The computer does not allow the student to "continue" beyond such a slide until he has successfully answered each question on it. An attempt to bypass questions causes the computer to ring a bell indicating a fault. As the student types his answer on the keyset, it is transmitted—character by character—to the computer, which in turn displays each character in the space provided on the slide. As has already been mentioned, the characters comprising an answer are written on the student's display via the storage tube, whose video is superimposed on the video output of the slide scanner. Thus the student is able to see his answer in the context of the question. The student indicates to the computer that he has completed his answer by pushing the "judge" button on his keyset. Depending on whether the answer submitted was correct or not, the computer writes "OK" or "NO" (see Fig. 5). Answers are judged by the computer by means of special subroutines discussed below. If the answer submitted is correct, the student may proceed to the next problem on that slide or, if this answer "completes" the slide, he is allowed to continue to the next slide. On the other hand, if the answer submitted was incorrect, the student may proceed to submit revised answers, each of which is judged by the machine just as before. Thus, PLATO in no way limits the time which a student may devote to a particular problem or the number

Authorized licensed use limited to: University of Michigan Library. Downloaded on November 24,2020 at 23:00:54 UTC from IEEE Xplore. Restrictions apply.

of answers he chooses to submit. The machine restricts the student's freedom only by not allowing him to go on until he has solved a problem successfully.

Nevertheless, a student may encounter a problem which he *cannot* solve, or even, perhaps, does not care to solve. For this contingency, each problem is provided with a "help" or supplementary slide sequence, which is entered when the student pushes the help key. The slides of the help sequence are designed to aid the student in answering the question causing difficulty. They may contain further pertinent textual material and pose further questions to the student. Breaking down the main problem into a series of easier subproblems is particularly well-suited to this logic. Thus, the help sequence may be designed to lead the student by the hand, as it were, to the solution of the main problem. When the student has completed the last slide of a help sequence, "continue" causes the computer to return to the main sequence. The original problem is once more presented to the student with the hope that he is now in a position to solve it. Nevertheless, the student—even after completing a help sequence—may still not be able to answer the question posed to him. The memory limitations of ILLIAC make it impossible to present another (secondary) help sequence under such circumstances. If the student has not obtained the necessary help from the first help sequence and asks for help again, the computer simply *provides* him with the correct answer to the problem and permits him to go on. The same logic applies to questions posed in the help sequence itself. A student's request for "help" for such questions causes the computer to provide the correct answer in the space provided on the slide.

On the other hand, having once asked for help, a student is not obliged to complete the help sequence. By pushing the "aha" button at any point in the course of a help sequence, he indicates to the machine his desire to be confronted once more with the main problem. If he is now able to answer the main question correctly, he is allowed to go on. Otherwise, a renewed request for help causes the machine to return the student to the point in the help sequence at which he broke off. This feature is designed to enable the student to use the machine with flexibility: he is not required to run through material which he does not think he needs.

Answers may be judged in a variety of ways. For questions which have a unique, well-defined answer, it is sufficient for the computer to compare the incoming student answer against the prestored correct answer. For questions whose answers require decimal expansions, tolerances can be specified within which the answer must lie. More flexible judging routines are possible, but have not yet been implemented. For example, the correct answer need not be prestored at all, but the computer itself may determine by appropriate computations whether the student's answer is correct. It also appears desirable that the computer not merely judge answers, but that it also examine each wrong answer for specific errors (*e.g.*, a numeral in octal notation containing a digit greater than 7). If such a feature were provided, the instructional material should include special help sequences associated with each kind of error. Such a program appears to be quite feasible with modern high-speed computers.

Since the core of PLATO is a general-purpose digital computer, computational aids may be provided for the student. Thus, by pressing the "calculate" button on his keyset, the student can turn ILLIAC into a floating-point desk calculator. His calculations are displayed in a special place provided on the slide. Such a facility appears to be useful for subject-matters in which extensive calculations may be required to solve a problem.

Finally, the computer keeps accurate records of each move made by the student in his progress through the material. These are available within several minutes after each lesson both in printed format and in a form suitable for further machine data processing. The records include such information as length of time spent on each slide, help sequences used, a list of every answer submitted for each problem, etc.

General Discussion

The important features of PLATO are:

1) Each student may proceed through the material in a manner and at a speed of his own choosing, subject only to the boundary condition that he must solve successfully a prescribed sequence of problems. He may submit as many or as few answers to a question and seek as much or little supplementary material as he likes. It was felt that one cannot know a *priori* what a particular student needs at any point in his progress through the material as well as the student himself can know it. If the main sequence is written for the best students and the help sequences for the poorest ones, then each student may find for himself a suitable path in the spectrum between these two extremes by use of the "help" and "aha" keys.

2) The machine will accept and display constructed answers, as well as the more restrictive answers to multiple choice questions. The student is told as soon as he has submitted an answer whether it is correct or incorrect. In the latter case, the machine can indicate "NO" without in any way revealing the correct solution. Also, since a student cannot proceed before answering a question correctly, the answer to any question may be used in the textual material of subsequent parts of the sequence. Finally, if the student reviews by means of the "reverse" key, his answers to questions on previous slides are again automatically displayed by the machine; the slide sequence now assumes the character of a filled-in work book.

3) The equipment, as well as the programmed logic, appears to be sufficiently versatile so that a change from one subject matter to another is possible by simply replacing slides in the slide selector and giving the computer a new set of parameters. Sequences of material with subject matters varying as widely as number theory and French grammar have been prepared.

Authorized licensed use limited to: University of Michigan Library. Downloaded on November 24,2020 at 23:00:54 UTC from IEEE Xplore. Restrictions apply.

For the purposes of providing an instrument for education research, the following points seem to be particularly important:

1) The material is presented to every student in a standard objective fashion.
2) At the end of any lesson, the experimenter has at his disposal a complete record of the student's progress through the material. One hopes that such records, after suitable processing on the machine, will not only provide information about each student, but will be of use in revising the material taught.

Teaching Studies

Some teaching has been attempted with the equipment and program logic described above. The studies were too limited in scope to draw formal conclusions, but a few observations on the effectiveness of PLATO as a teaching device can be reported.

Subjects of the study were six students of a senior mathematics class at the University High School, who were to be given a one-lesson introduction to number representation with arbitrary positive base. The sequence, consisting of 24 main slides and 40 help slides, aimed at giving a student a general understanding of positional notation as well as the ability to convert from one base representation to another.

The students were first given a half-hour demonstration of the machine. In addition, each student had an individual practice session in which to acquaint himself with the use of the keyset for controlling the machine's operations. For these purposes, sequences of material were used with which the students were already thoroughly familiar.

During the instruction session itself, each student was by himself in a room containing only his keyset and TV display. In another room, a TV monitor enabled observers to follow the student's progress through the material. As already mentioned, permanent records of each student's interaction with the machine were available shortly after each session.

Brief pre-tests and post-tests were used to determine how much each student had learned from the machine. In addition, each student was encouraged to discuss his reactions to the machine in informal "de-briefing" sessions. The following observations concerning the study may be of interest.

1) All the students seemed to grasp the operations of the machine easily and thoroughly. They mastered the use of the keyset very quickly during the practice session and appeared to operate the machine effectively during the main exercise. Thus, there seems to be no reason for fearing that operating a well-designed keyset will interfere with learning.

2) No student complained about reading the TV picture, though each was explicitly asked about this in the de-briefing session.

3) Comparison of each student's pre-test and post-test showed that the students had definitely learned from the machine. They had indicated only the vaguest knowledge of the material on the pre-test, but were able to answer *most* of the questions on the post-test correctly. Nevertheless the questions they missed, as well as the informal conversations with them, indicated strongly that they had not yet mastered the material *thoroughly*. The reason for the deficiency of their knowledge appears to be twofold:

a) The material appears to have been presented somewhat too tersely. An expanded, reorganized main sequence with amplified discussion, more examples, and more practice problems seems called for.

b) A more basic revision of the machine's logic is under consideration.

With the current logic, as soon as the student gets a problem right—no matter by what means—he is sent on to the next order of business. However, it now seems clear that in determining whether to proceed, the computer should take into account *how* the student came to the correct answer to a question. Three factors seem to be of importance:

i) How much time was required to solve the problem?
ii) How many wrong answers were submitted?
iii) Was help required?

On the basis of these three factors, the computer should decide whether to go on to the next point in the main sequence or continue to dwell on points relating to the current problem.

4) The last point is so highly subjective that it should be taken *cum grano salis*. A teacher from the high school, well-acquainted with the students' personality and classroom behavior, hazarded to predict each student's approach to the machine: Would the student exhibit caution in his approach or a curiosity to explore the machine's capabilities? would he be methodical? would he hesitate to ask for help? These predictions seemed to be largely borne out. Thus, a student's approach to a teaching machine may not differ fundamentally from his approach to learning in general.

Authorized licensed use limited to: University of Michigan Library. Downloaded on November 24,2020 at 23:00:54 UTC from IEEE Xplore. Restrictions apply.